E-Class Coupé

Mercedes-Benz

Like a magnet!

Resistance useless

The machine has stirred. The new E-Class Coupé shows its face. It displays its good looks. It flexes its muscles. And it demonstrates style. All to get your undivided attention.

D
S UN 537

In focus: the E 350 CGI BlueEFFICIENCY with direct injection | AGILITY CONTROL package | ADAPTIVE BRAKE with HOLD function

Like an arrow!

Hooked on torque

It has an engine which is the definition of power. A suspension which smooths out the road. A transmission which skips gears. A brake which can think for itself on hills. It has it all. The only thing that's missing is a driver.

Like muscles!

Tangibly alluring

Your option: AMG sports package with new-design front and rear apron, and side skirts. Speed-sensitive sports steering. 18-inch AMG light-alloy wheels

Sport is the muscular design. The directness of the steering. Sport is the tuning of the sports suspension. The dimensions of the light-alloy wheels. Sport is your pulse rate. And the AMG sports package will set it racing, guaranteed!

Design

The design of the E-Class Coupé is unmistakable – from the radiator grille at the front to the tailpipes at the rear, and in every interior detail too. The front section that brims with character, the powerful shoulder-line and the muscular rear together spell sheer dynamism, while the continuous line of retractable side windows without a B-pillar in the way effuses a matchless elegance.

- Twin headlamp face with projection-beam headlamps
- Daytime driving lights combined with front fog lamps in twin circular design (standard) or LED design (optional extra)
- Mercedes-Benz star integrated into radiator grille with two louvres
- Striking, sporty tail including diffuser and LED-design tail lights
- Tailor-made interior with sharply contoured cockpit, seating and trim elements
- Panoramic glass sunroof extending from the windscreen to the tail (optional extra)
- Dynamic AMG sports package (optional extra)
- Exclusive light-alloy wheels

Drive system

You can now indulge in environmentally conscious motoring and trade-mark coupé sportiness rolled into one. There are five fuel-efficient engines for you to choose from. If necessary, the 7G-TRONIC automatic transmission skips individual gears. And the AGILITY CONTROL package ensures effortless transfer of power to any road by automatically adapting to the changing driving situation and permanently smoothing out the bumps.

- Two diesel engines with 4 and 6 cylinders
- Three petrol engines with 4, 6 and 8 cylinders
- 4 and 6-cylinder models come with the BlueEFFICIENCY package of measures as standard
- 6-speed manual transmission (standard for E 250 CDI), 5-speed automatic transmission (standard for E 250 CGI, optional for E 250 CDI) or 7G-TRONIC automatic transmission (standard for E 350 CDI, E 350 CGI, E 500)
- AGILITY CONTROL package with selective damping system
- Dynamic handling package with selectable Sport driving mode (optional extra)

The E-Class Coupé. An object of desire

Comfort

Everything is geared towards comfort. In the new E-Class Coupé, the goal of every journey is the same: relaxation. Thanks to its luxurious appointments and intelligent assistance systems, driver and passengers alike can savour each and every mile covered, even on long drives. The sense of wellbeing starts the moment you get in, by the way, when the automatic belt feeders eliminate the necessity to fumble around.

- Automatic belt feeders (also operable by means of button on centre console)
- Front seats electrically adjustable for height and backrest angle
- Memory package (optional extra): electric adjustment of the front seats, steering column and exterior mirrors with memory function, including front seats with electrically adjustable 4-way lumbar support for ergonomic support of the back
- Climatised seats (optional extra)
- Multicontour seats for individual seat adjustment (optional extra)
- 12-button multifunction steering wheel
- Central colour display in dashboard and central controller on centre console
- COMAND APS with navigation, CD/DVD player, radio, telephone controls and voice-operated control system (optional extra)
- Harman Kardon® Logic 7® surround sound system (optional extra)
- Reversing camera (optional extra)
- PARKTRONIC including Parking Guidance (optional extra)
- ADAPTIVE BRAKE with Hill-Start Assist, brake drying and HOLD function

Safety

The E-Class boasts supreme standards of safety, giving you complete peace of mind during every drive. A string of technologies are designed to help either prevent accidents or at least mitigate the outcome. There are also numerous assistance systems that come to the driver's aid in critical situations.

- ATTENTION ASSIST: detects the onset of drowsiness and can alert the driver to an impending microsleep
- PRE-SAFE® system
- DISTRONIC PLUS (optional extra): regulates the distance to the vehicle ahead automatically, including in stop-and-go traffic. If there is a risk of a rear-end collision and the driver fails to react to the visual and audible warnings, the PRE-SAFE® Brake can initiate braking by itself
- Intelligent Light System with Adaptive Highbeam Assist (optional extra): smoothly adjusts the headlamps so that oncoming traffic is not dazzled
- Airbags and sidebags for driver and front passenger, kneebag for driver's seat, windowbags for all seats. Sidebags in the rear as an optional extra

→ www.mercedes-benz.com

Standard equipment and interior concepts

The coupé radiator grille with its two louvres and the 17-inch multi-spoke light-alloy wheels emphasise the sporty elegance of the E-Class Coupé

The new E-Class Coupé comes dressed to impress. The 17-inch light-alloy wheels, the brushed aluminium trim and the high-class appointments materials alone are enough to satisfy the most discerning tastes. For the interior – which is upholstered in a combination of fabric and ARTICO man-made leather as standard – there is a choice of two concepts: with the ELEGANCE concept, the interior's tone-in-tone colour scheme is set off to stylish effect by the light-coloured A-pillars, C-pillars and roof liner. The dashboard, steering wheel and selector lever are trimmed in a discreet contrasting colour. In the case of the AVANTGARDE interior concept with its black pillars and black roof liner, you can choose a colour to contrast with the black passenger compartment trim: the seats are then upholstered in either fabric/ARTICO man-made leather or leather (optional extra) in the desired colour. The door panels and the side sections in the rear are trimmed to match using the same material in the selected colour.

The ELEGANCE interior concept: tone-in-tone with understated contrast colours, light-coloured roof liner, plus light-coloured A and C-pillars

The AVANTGARDE interior concept: the base interior colour of black combined with any one of five contrast colours injects added sporty flair

First-row seats for passengers in the rear too: the individual seats with a stowage compartment in-between have a sporty feel about them – shown here in the sophisticated ELEGANCE interior concept

The distinct, overtly sporty AVANTGARDE interior concept is a treat for the eyes in the rear too, thanks to an attractive colour scheme and absorbing contrasts

Illustrations of interior include items of optional equipment

Optional extras

The AMG sports package gives added impact to the sportiness of the E-Class with features such as the AMG front and rear aprons, side skirts, 18-inch AMG 6-twin-spoke light-alloy wheels, as well as a sports suspension with speed-sensitive sports steering

A wealth of exclusive optional extras are available to choose from for the new E-Class Coupé. Assistance systems, such as the DISTRONIC PLUS proximity control system, the Intelligent Light System and the reversing camera, help the driver and boost safety. For motoring in complete relaxation, there is also the option of the COMAND APS multimedia system with a DVD changer and the voice-operated control system LINGUATRONIC, as well as the Harman Kardon® Logic 7® surround sound system. Apart from the dynamic handling package with its Sport driving mode, the AMG sports package also adds an extra touch of dynamism, thanks to the AMG bodystyling's muscular lines and the 18-inch AMG light-alloy wheels that radiate pure driving pleasure. Inside, features include multicontour seats in ARTICO man-made leather as standard, an AMG sports steering wheel with speed-sensitive sports steering, floor mats with AMG lettering, plus sports pedals made from brushed stainless steel.

The multicontour seats enable individual adjustment of the backrest, side bolsters and seat cushion length, and have a sporty yet comfortable feel (optional extra, standard with AMG sports package)

The panoramic glass roof forms what appears to be a continuous glass surface from the windscreen to the rear window, and opens up a whole new perspective for occupants and onlookers alike

The DISTRONIC PLUS proximity control system automatically controls the distance from the vehicle ahead, even in stop-and-go traffic

COMAND APS combines a telephone, audio system and navigation in one. All the main functions can be called up with the greatest of ease thanks to the voice-operated control system LINGUATRONIC

Illustrations of interior include items of optional equipment

NON-METALLIC PAINTS

040 black

590 fire opal

650 calcite white

METALLIC PAINTS

197 obsidian black

METALLIC PAINTS

230 indigolite blue

359 tanzanite blue

755 tenorite grey

775 iridium silver

792 palladium silver

METALLIC PAINTS

798 sanidine beige

799 diamond white BRIGHT

SPECIAL PAINT

786 stannite grey

ELEGANCE colours

black | black

reef grey | alpaca grey

mocha brown | almond beige

ELEGANCE trim

739 aluminium[1]

731 burr walnut (optional extra)

H13 brown pine[2] (optional extra)

ELEGANCE upholsteries

711[3, 4] fabric / ARTICO

101[5] ARTICO

201 | 801[6] leather

718[3, 4] fabric / ARTICO

208 | 808[6] leather

205 | 805[6] leather

AVANTGARDE colours

black | black

black | alpaca grey

black | almond beige

AVANTGARDE trim

739 aluminium

736 black ash[2] (optional extra)

AVANTGARDE upholsteries

701[3, 4] fabric / ARTICO 101[5] ARTICO

251 | 851[6] leather

258 | 858[6] leather

255 | 855[6] leather

AVANTGARDE colours

black | natural beige

black | flamenco red

AVANTGARDE upholsteries

254 leather

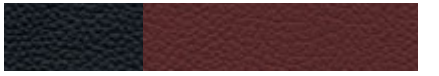

257 leather

[1] Not in conjunction with almond beige
[2] Available from approx. June 2009
[3] ARTICO man-made leather
[4] Not in conjunction with AMG sports package
[5] AMG sports package in black ARTICO man-made leather as standard, available in leather and nappa leather as an optional extra
[6] Nappa leather

Technical data

	E 250 CDI BlueEFFICIENCY[1]	E 350 CDI BlueEFFICIENCY	E 250 CGI BlueEFFICIENCY[2]	E 350 CGI BlueEFFICIENCY	E 500
No. of cylinders/arrangement	4/in-line	6/V	4/in-line	6/V	8/V
Total displacement (cc)	2143	2987	1796	3498	5461
Rated output[3] (kW at rpm)	150/4200	170/3800	150/5250	215/6400	285/6000
Rated torque[3] (Nm at rpm)	500/1600–1800	540/1600–2400	310/2000–4500	365/3000–5100	530/2800–4800
(manual transmission)	(500/1600–1800)	–	–	–	–
Compression ratio	16.2	15.5	9.3	12.2	10.7
Acceleration 0–100 km/h (s)	7.2	6.7	7.6	6.3	5.4
(manual transmission)	(8.1)	–	–	–	–
Top speed, approx. (km/h)	249	250[4]	248	250[4]	250[4]
(manual transmission)	(250[4])	–	–	–	–
Tyre size, front	235/45 R 17	235/45 R 17	235/45 R 17	235/45 R 17	235/40 R 18
Tyre size, rear	235/45 R 17	235/45 R 17	235/45 R 17	235/45 R 17	255/35 R 18
Fuel	Diesel	Diesel	Premium	Premium	Premium
Fuel consumption[5] (l/100 km)					
Urban	n/a	8.9	n/a	12.3–12.4	16.1
Extra-urban	n/a	5.6	n/a	6.3–6.6	7.8
Combined (manual transmission)	5.8 (5.3)	6.8	7.0	8.5–8.7	10.9
CO_2 emissions[5] (g/km), combined	158	179	164	199–203	254
(manual transmission)	(138)	–	–	–	–
Tank capacity (l)/incl. reserve, approx.	66/8	66/8	66/8	66/8	66/8
Boot capacity (l)	450	450	450	450	450
Turning circle diameter (m)	10.95	10.95	10.95	10.95	10.95
Kerb weight[6] (kg) (manual transmission)	1690 (1695)	1730	1580	1670	1715
Perm. GVW (kg) (manual transmission)	2160 (2165)	2180	2050	2140	2180

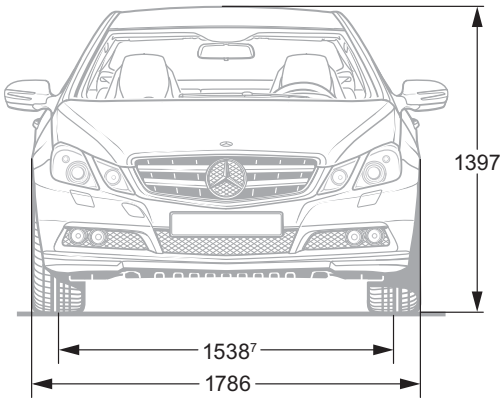

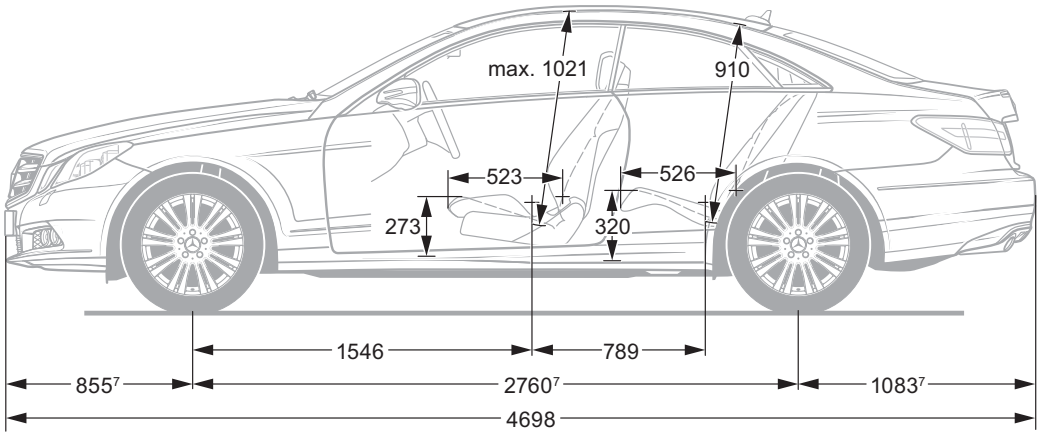

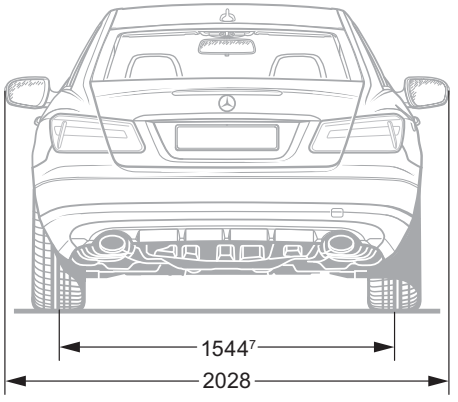

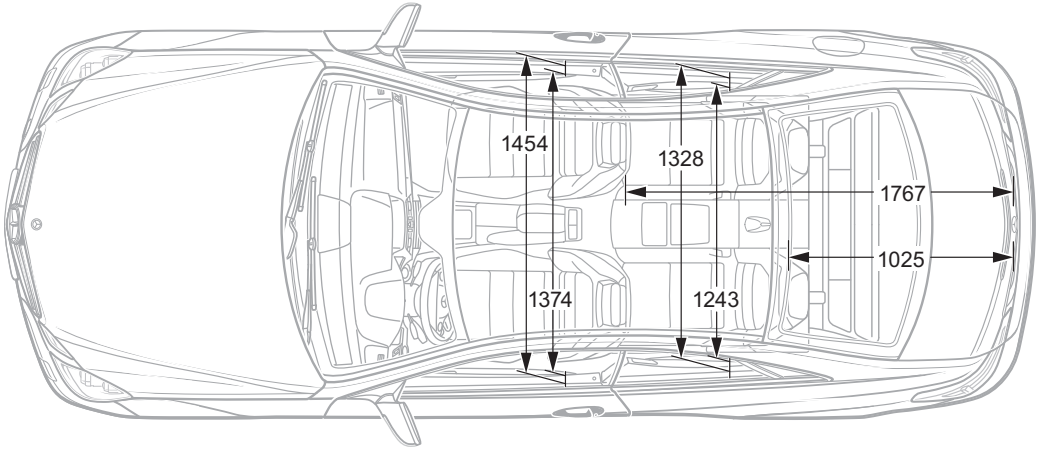

All measurements in millimetres. The dimensions shown are mean values and apply to standard-specification, unladen vehicles

[1] Available from approx. 08/2009. Some of the figures shown are provisional [2] Available from approx. 09/2009. Some of the figures shown are provisional [3] Figures according to Directive 80/1269/EEC in the currently applicable version [4] Electronically governed [5] The figures shown were obtained in accordance with the prescribed measuring process (Directive 80/1268/EEC in the currently applicable version). The figures are not based on an individual model and do not constitute part of the product offer; they are provided solely for purposes of comparison between different vehicle models. [6] Figures according to Directive 92/21/EC, version 95/48/EC (kerb weight with fuel tank 90% full, driver, 68 kg, and luggage, 7 kg) for standard-specification vehicles. Optional extras and accessories will generally increase this figure and reduce the payload capacity accordingly [7] Carrying 3 people, each weighing 68 kg

Take-back of end-of-life vehicles. Coming full circle. At the end of its long life, you can return your E-Class to us for environment-friendly disposal in accordance with the EC End-Of-Life Vehicle Directive[1]. But that day lies a long way off.

[1] Applies in accordance with national regulations to vehicles up to 3.5 tonnes gross weight. Mercedes-Benz passenger cars have met the statutory regulations governing the suitability of their design for reuse and recycling for a number of years now. A network of vehicle take-back depots and dismantlers has been established which will process your vehicle in an environment-friendly manner. The ways in which both vehicles and parts can be recovered are subject to ongoing development and improvement. Consequently, the E-Class will be able to comply with any future increases in the recycling quota within the stipulated time limits. For further information, please call 00800 1 777 7777.

Please note: changes may have been made to the product since this brochure went to press (25.11.2008). The manufacturer reserves the right to make changes to the design, form, colour and specification during the delivery period, provided these changes, while taking into account the interests of the vendor, can be deemed reasonable with respect to the purchaser. Where the vendor or the manufacturer uses symbols or numbers to describe an order or the subject of an order, no rights may be derived solely from these. The illustrations may show accessories and items of optional equipment which are not part of standard specification. Colours may differ slightly from those shown in the brochure, owing to the limitations of the printing process. This brochure has been compiled by Daimler AG of Germany and is distributed internationally. It provides a general indication of the range of models, features, optional extras and/or colours available in various countries. Some of the models, features, optional extras and/or colours shown may not be available in your country or may only be available in a different specification. Additionally some models, features, optional extras and/or colours may only be available in combination with others. For current and more specific information in relation to the range of models, features, optional extras and/or colours available in your country, and their pricing, you should contact your nearest authorised Mercedes-Benz Passenger Car Dealer.
www.mercedes-benz.com

Daimler AG, Stuttgart BC/MR 6701 · 0414 · **02**-00/0209 Printed in Germany